ZEG-ENERGETYKA

AWZ-1

Tap changer position indicator

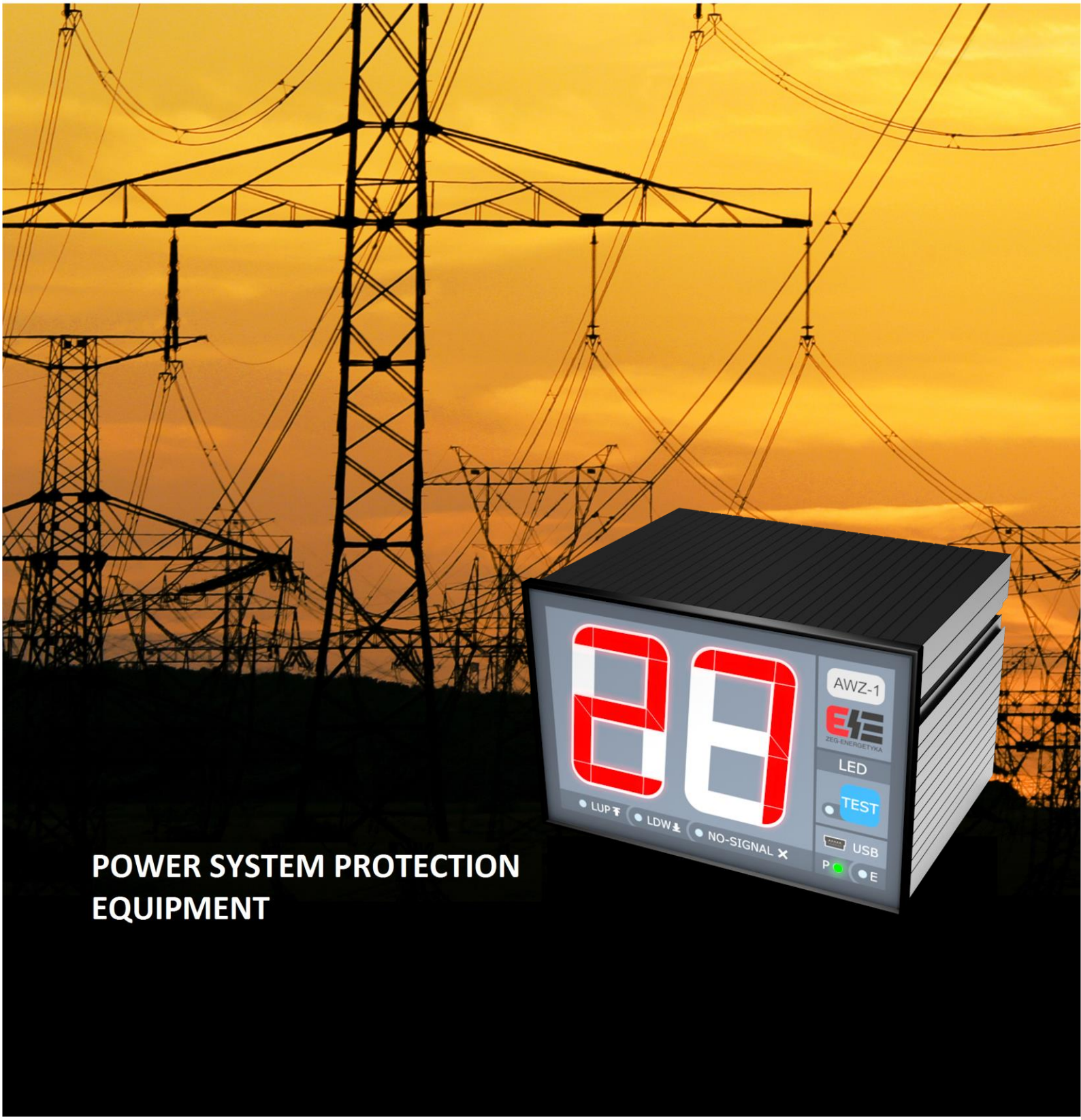

POWER SYSTEM PROTECTION EQUIPMENT

TABLE OF CONTENT

1. MANUFACTURER COMMENTS

1.1. General safety rules

WARNING!
During normal operation of the device, some of its parts are under hazardous voltage. Inappropriate or improper use of the device can pose a danger to persons serving, also leads to damage of the device.

1.2. List of applied standards

The device described in this manual has been designed and manufactured for industrial purposes. In the process of development and production, compliance with the standards has been assumed, the fulfilment of which ensures the implementation of the assumed principles and safety measures, provided that the user complies with the installation, commissioning and operating instructions.

This device complies with the essential requirements of the Low Voltage Directive (2014/35/UE) and the Electromagnetic Compatibility Directive (2014/30 / EU), in compliance with the following standards:

- **PN-EN 60664-1:2011** Insulation coordination for equipment within low-voltage systems - Part 1: Principles, requirements and tests
- **PN-EN 61010-1:2011** Safety requirements for electrical equipment for measurement, control, and laboratory use -- Part 1: General requirements
- **PN-EN 60255-26:2014-01** Measuring relays and protection equipment -- Part 26: Electromagnetic compatibility requirements
- **PN-EN 61000-6-2:2008** Electromagnetic compatibility (EMC) - Part 6-2: Generic standards - Immunity for industrial environments
- **PN-EN 61000-6-4:2008/A12:2012** Electromagnetic compatibility (EMC) - Part 6-4: Generic standards - Emission standard for industrial environments

Related standards:

- **PN-EN 61000-4-2:2011** Electromagnetic compatibility (EMC) - Part 4-2: Testing and measurement techniques - Electrostatic discharge immunity test
- **PN-EN 61000-4-4:2013-05** Electromagnetic compatibility (EMC) - Part 4-4: Testing and measurement techniques - Electrical fast transient/burst immunity test
- **PN-EN 61000-4-5:2014-10** Electromagnetic compatibility (EMC) -- Part 4-5: Testing and measurement techniques -- Surge immunity test
- **PN-EN 61000-4-11:2007** Electromagnetic compatibility (EMC) - Part 4-11: Testing and measurement techniques - Voltage dips, short interruptions and voltage variations immunity tests
- **PN-IEC 255-11:1994** Electrical relays - Part 11: Interruptions to and alternating component (ripple) in d.c. auxiliary energizing quantity of measuring relays

1.3. Storage and transport

The devices are packed in individual packages to protect them from damage during transport and storage. Equipment should be stored in transport packs, indoors, free of vibration and direct atmospheric, dry, airy, free from harmful vapors and gases. Ambient air temperature should not be below -20 ° C and above + 70 ° C and relative humidity should not exceed 80%.

1.4. Place of installation

The equipment should work in areas free of water, dust and gases and explosive, flammable and chemically active gases where the mechanical exposure is moderate. Installation height should not exceed 2000 m above sea level at an ambient temperature of -5 ° C to + 40 ° C and relative humidity not exceeding 80%.

The device terminal marked with the PE symbol should be connected to ground potential. It is recommended to use stranded wire of cross section min. 2,5 mm^2 and insulation strength min. 500 V with a length of no more than 3 m.

1.5. Device documentation

The device comes with:

- Operating manual
- Test protocol
- Warranty Card

1.6. Disposal

The device has been manufactured mostly from materials that can be recycled or disposed of without endangering the environment. A recalled device may be recaptured for re-processing, provided that its condition corresponds to normal wear and tear. All components that are not regenerated will be removed in an environmentally friendly manner. The device should be disposed of in accordance with local law or passed on to an electronic waste disposal company.

1.7. Warranty and service

The warranty period is 24 months from the date of sale, unless a longer period agreed in the contract or the sales contract.

The warranty covers free of charge removal of defects revealed during use, under the conditions specified in the warranty card.

ZEG-ENERGETYKA SP. Z O.O. gives a guarantee subject to the following conditions:

- the installation and operation of the device should be in accordance with that manual
- the seal on the device's housing must not be affected
- no corrections or changes can be made to the warranty card

The warranty does not cover:

- defects caused in result of inappropriate transport or storage conditions
- defects caused in result of inappropriate installation or operation of the device
- defects caused in result of tampering within the unit, structural modifications, alterations and repairs carried out without the consent of the manufacturer

BUYER TIPS:

- Proper and trouble-free operation of the device requires proper transport, storage, mounting and commissioning, as well as proper operation, maintenance and service.
- The equipment must be handled by properly trained and qualified personnel
- When complaining, please state the reason for the complaint (symptoms related to malfunction) and factory serial number
- After receiving of the complaint confirmation, send the complaint device with the warranty card to the manufacturer's address
- The warranty period is extended by the time of successful complaint filling

1.8. How to order

The order should specify the full name of the device and all the necessary parameters:

- type and version of the device
- AWZ-1 – Tap changer position indicator

Example of order:

- AWZ-1 - 220V DC/AC Tap changer position indicator

1.9. Manufacturer’s data

ZEG-ENERGETYKA Sp. z o.o. Oddział Tychy
ul. Fabryczna 2
43-100 Tychy
Poland
tel: +48 32 775 07 80
tel/fax: +48 32 775 07 83
NIP: 6381805949
REGON: 242933572
VAT ID-No.: PL6381805949
e-mail: biuro@zeg-energetyka.pl
www.zeg-energetyka.pl

2. TECHNICAL DESCRIPTION

2.1. Application

Tap changer position indicator AWZ-1 is dedicated to visual indication of current position of tap changer of HV/MV transformer. The device is equipped with 24V DC inputs for receiving coded position purpose. Following coding standards are available: BCD, “BCD Energopomiar”, Binary, Gray or custom defined by the user.

The device is equipped with relay outputs, which allows to transmit tap number coded in different standard. Relays are able to work under different operating voltage ex. 220 V AC/DC. Available output coding standards are as follows: BCD, Binary, Gray or custom defined by the user.

Coding and uncoding of tap changer position number is used in cooperation with voltage regulation system of HV/MV transformer bays.

2.2. Main features

The device is equipped with:

- four independent communication ports i.e.:
  - one ST port (820 nm – fiber optic, multimode)
  - two RS485 ports (protocols: ZEG/IEC 870-5-103)
  - one USB port located on the front panel (for device setting purpose)
- in order to transfer data between AWZ indicators, the communication ports allows to connect the devices. It allows to send data at considerable distances and transfer it to SCADA
- possibility to receive code from the transmitter by RS485 port or by fiber optic port using serial communication protocol
- LED RGB segment display allows to choose displaying color with number dependent distinction
- possibility to colour signaling dependent on warning condition (example manner: one before last tap – yellow, last tap – red, normal tap – green, or in any different manner)

2.3. Construction

Tap changer position indicator is enclosured in aluminium casing of dimensions: 144 x 96 x 110 (mm). The device characterises modular design.

Binary inputs module (marked as A20) is equipped with 8 independent optoinsulated inputs of typical operating voltage 24 V DC. Different operating voltage level (ex. 220 V DC) for a special request. The binary inputs are grouped and have common frame terminal.

Relay outputs module (marked as Y16) is equipped with seven output relays, type RM-84. Relay outputs are grouped and connected by common terminal.

Supply voltage module (marked as A04) is equipped with 24 V DC transducer. Secondary voltage is led out and is typically used to supply transducer of tap changer position code. Supply voltage module is equipped with contact signalling the improper supply voltage level.

Communication module (market as A02) is equipped with fiber optic port with ST connection. Additional, two RS-485 ports are led out by screw terminals.

On the front panel, the AWZ is equipped with LED segment display, on which the number of tap changer position of transformer is displayed. The diodes signalling: power on, device failure, last tap or no signal are also located on front panel. The front layout of the device is shown on figure 1. The terminal layout is shown on figure 2, and side layout on figure 3. the dimension of mounting hole is shown on figure 4. Figure 5 presents the wiring diagram.

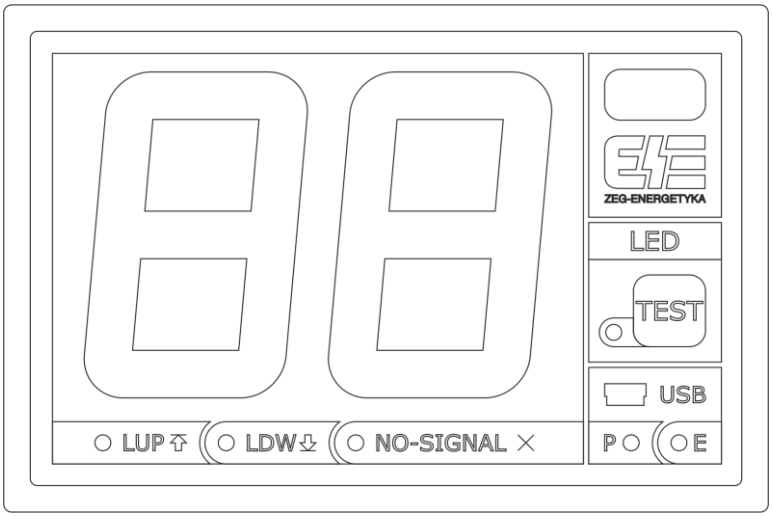

Fig. 1. Device front panel

LED diodes on the front panel (Fig. 1) indicates following information:

LUP – early warning signalling – approaching the highest tap or the highest tap approached

LDW – early warning signalling – approaching the lowest tap or the lowest tap approached

NO-SIGNAL – lack of input signal of the number of tap changer position – yellow LED diode

P – power on – green LED diode

E – error – red LED diode

TEST button serves to test proper operation of LED diodes

USB socket serves to communicate the device with PC computer (monitoring and setting)

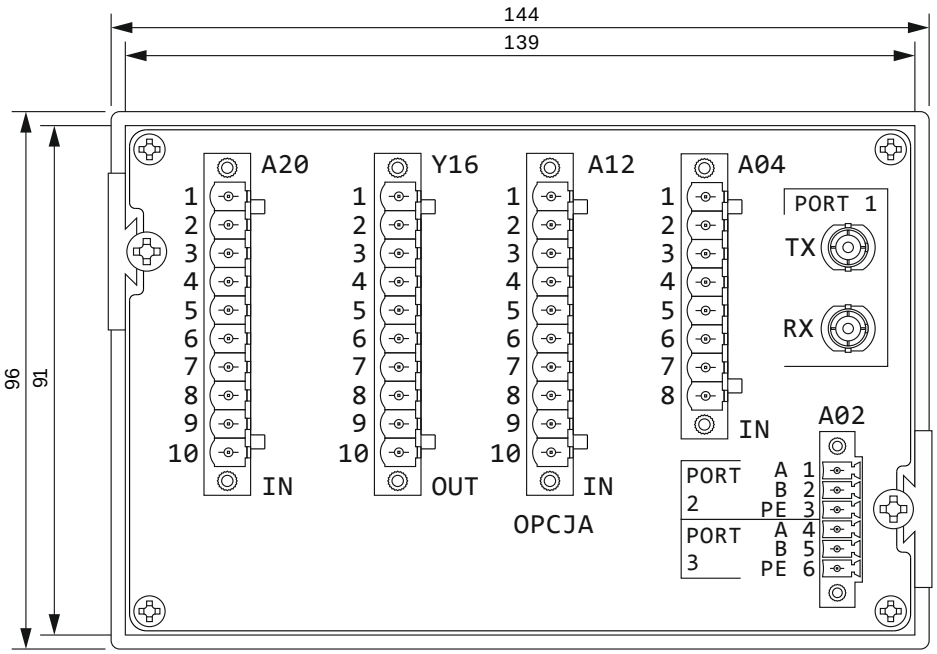

Fig. 2. Terminal arrangement

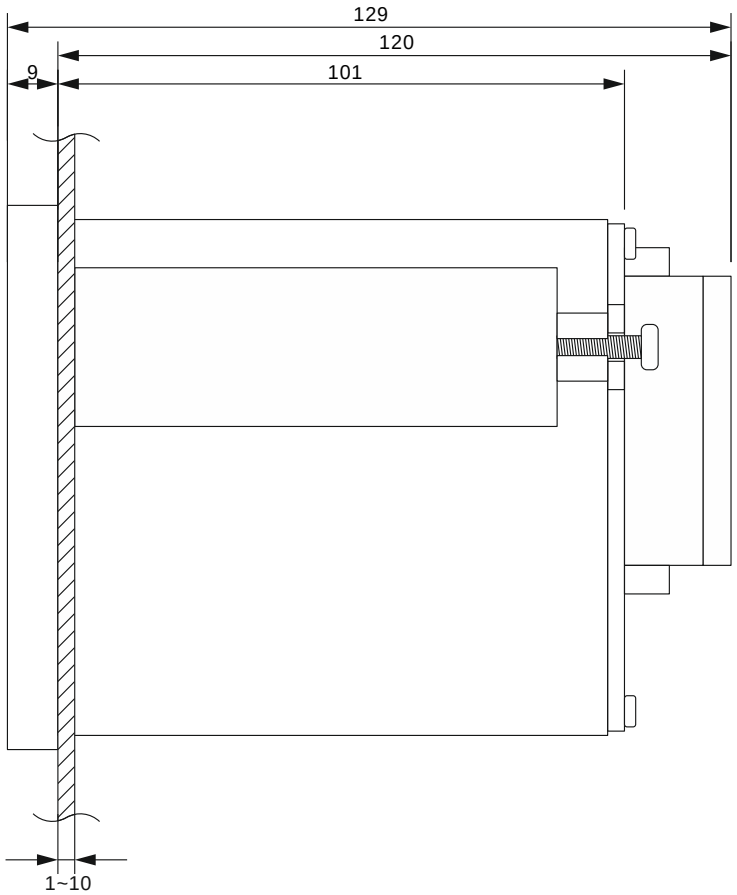

Fig. 3. Side view

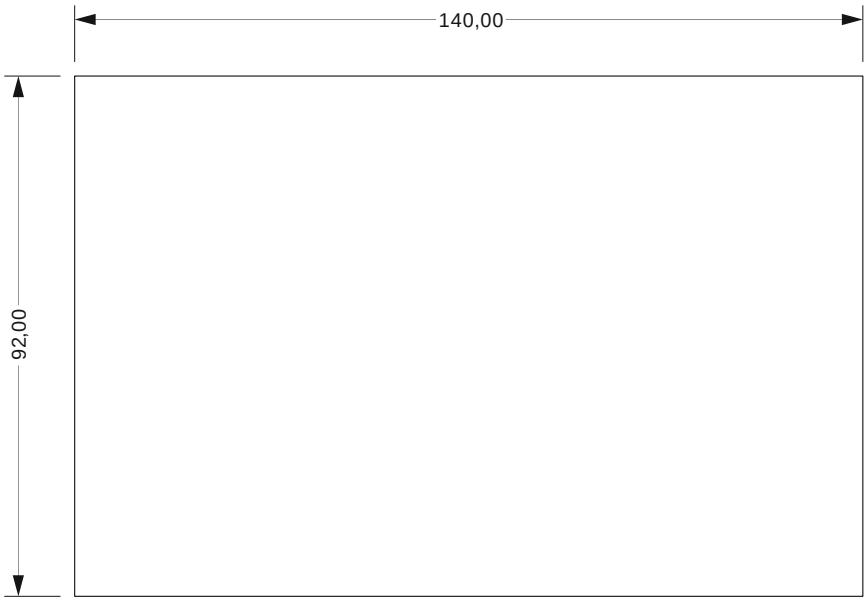

Fig.4. Mounting hole

Table 1. Inputs and outputs of AWZ-1

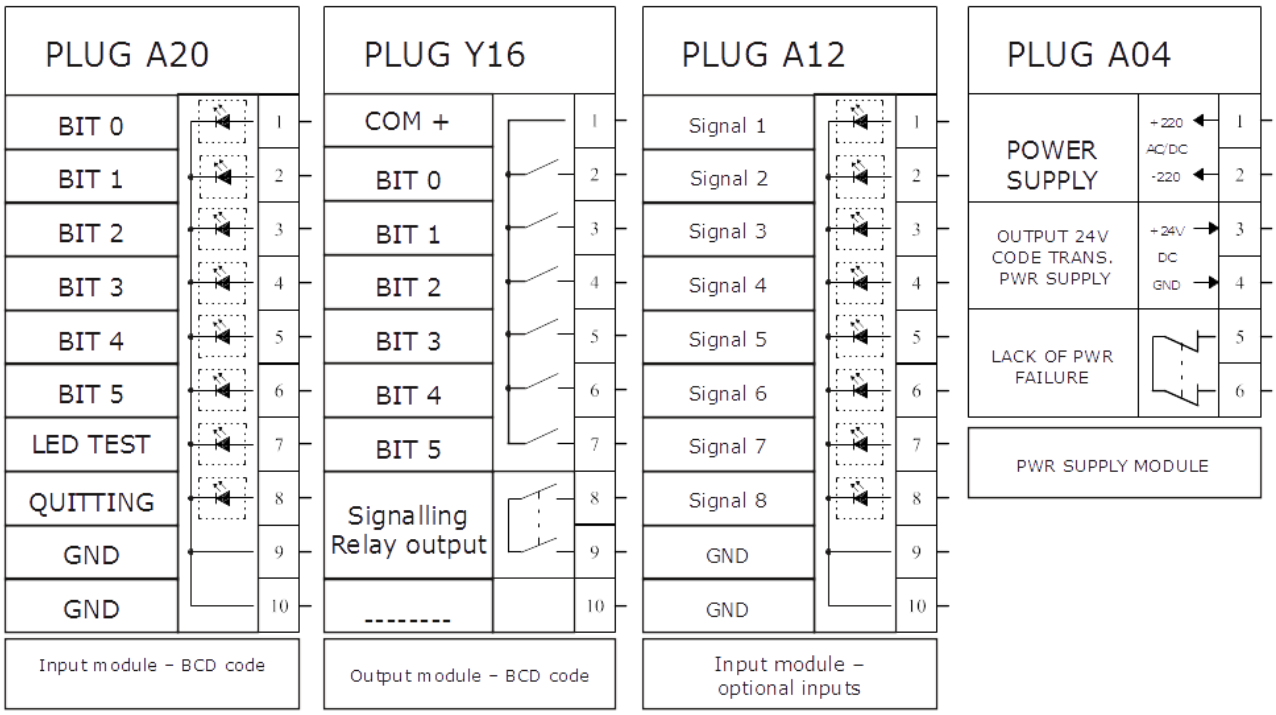

Table 2. Additional signals – optional

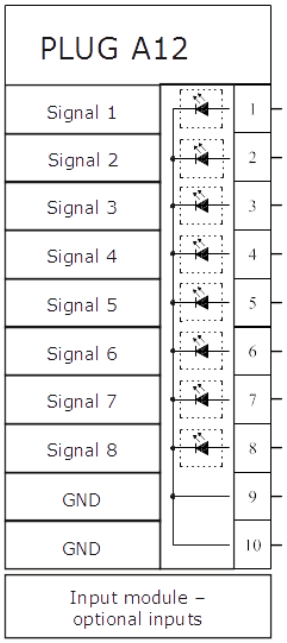

3. TECHNICAL DATA

Rated supply voltage	110-230 V DC/AC or different acc. to order
Input voltage	24 V DC/AC or different acc. to order
Number of binary inputs	8/16
Burden in binary inputs	0,3 W / input
Burden in supply voltage	<10 W
Number of relay outputs	7
Continuous contact carry	4 A
Breaking capacity	3 A (250 V AC, 0,2 A (220 V DC)
Communication ports	RS-485 (2x), fiber optic T (1x) USB (1x)
Dimensions	144 mm x 96 mm x 110 mm
Weight	0,5 kg
Insulation nominal voltage	2,5 kV, 50 Hz, 1 min
Voltage	II
Ingress protection	IP40/IP30
Ambient temperature	-5 – 40 ºC
Mount	flush

4. FUNCTIONAL PROPERTIES

4.1. Principle of operation

Tap changer position indicator AWZ-1 receives coded information about the tap changer position by the binary inputs module. The position number is received by six-bit fed by 24 V inputs voltage. Position number can be optionally received by RS-485 communication channel direct from transducer. In case of cooperation with ZEG-Energetyka code transmitter, the code can be transfer by ZEG protocol. The code of position number can also be received by the fiber-optic or RS-485 communication port, in case of receiving from considerable distance. The AWZ indicator is also able to code the position number in any standard (binary, BCD, Gray) and send it by relay outputs to another device (ex. to voltage regulating system). Position number can be also send by the communication protocol to another device or to SCADA system by IEC 870-5-103 protocol. Terminals are shown on fig. 5. The wiring diagram is shown on fig. 6. Connectors are described in table 1. The additional output signals for a special request – table 2.

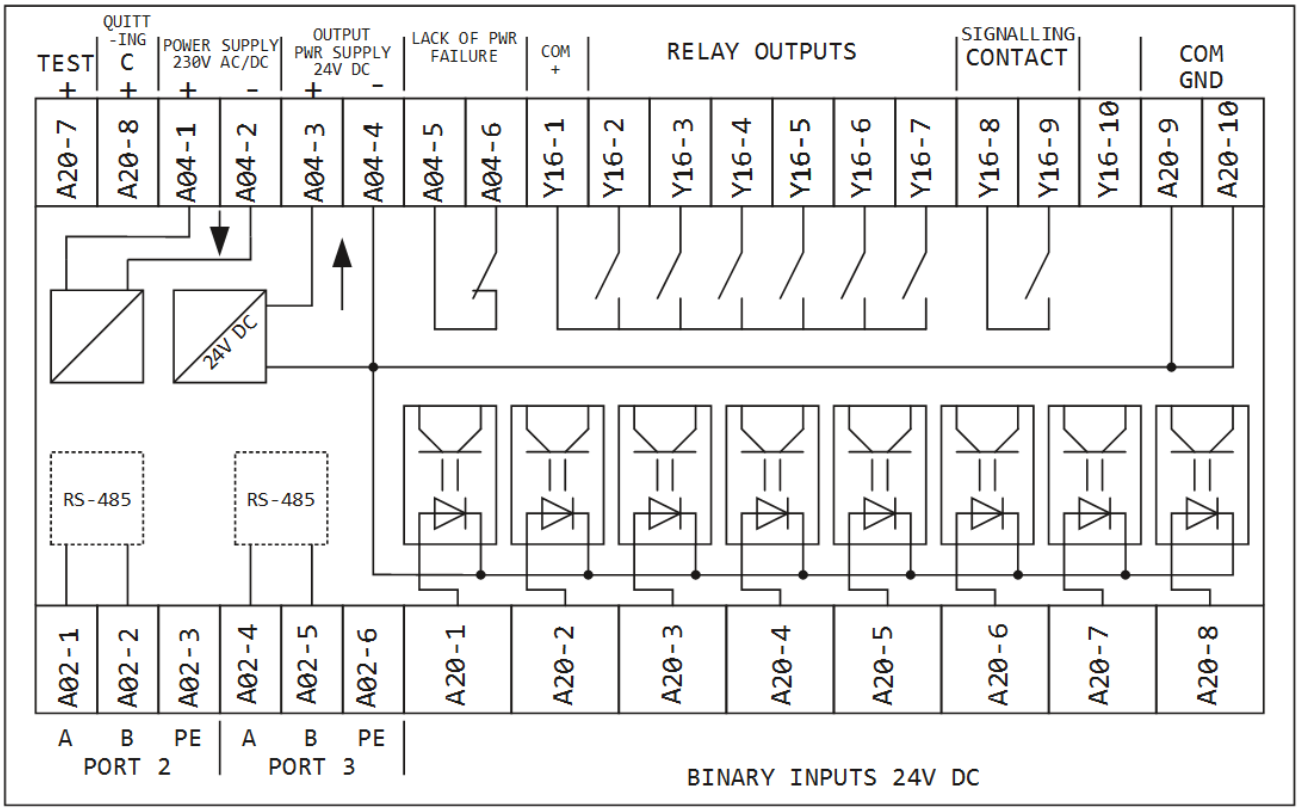

Fig. 5. External connection of AWZ-1 diagram

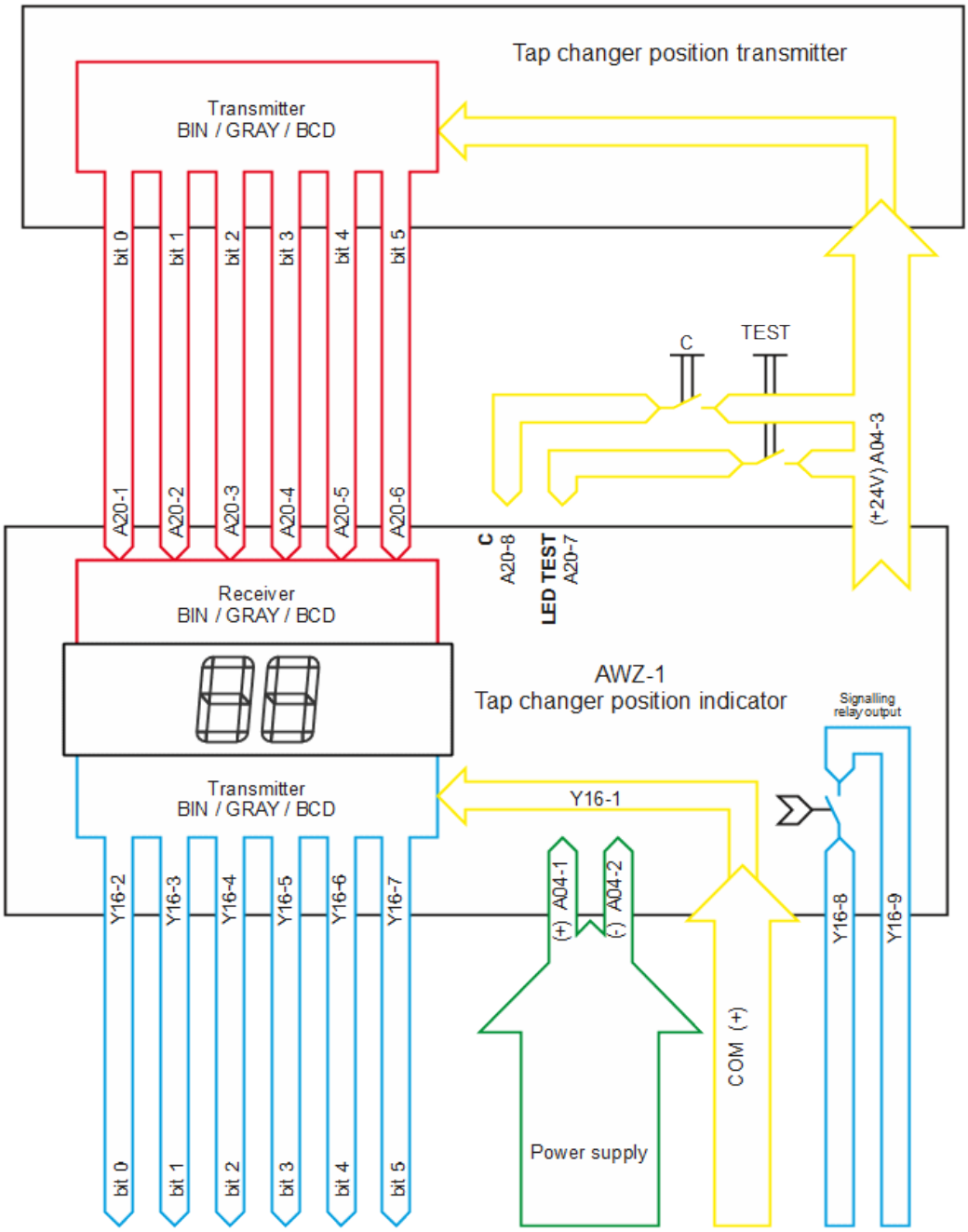

Fig. 6. Block diagram of cooperation the AWZ-1 indicator with code transmitter

In case of transformer equipped with Energopomiar BCD code transmitter, the connection should be made in the manner presented on figure 7.

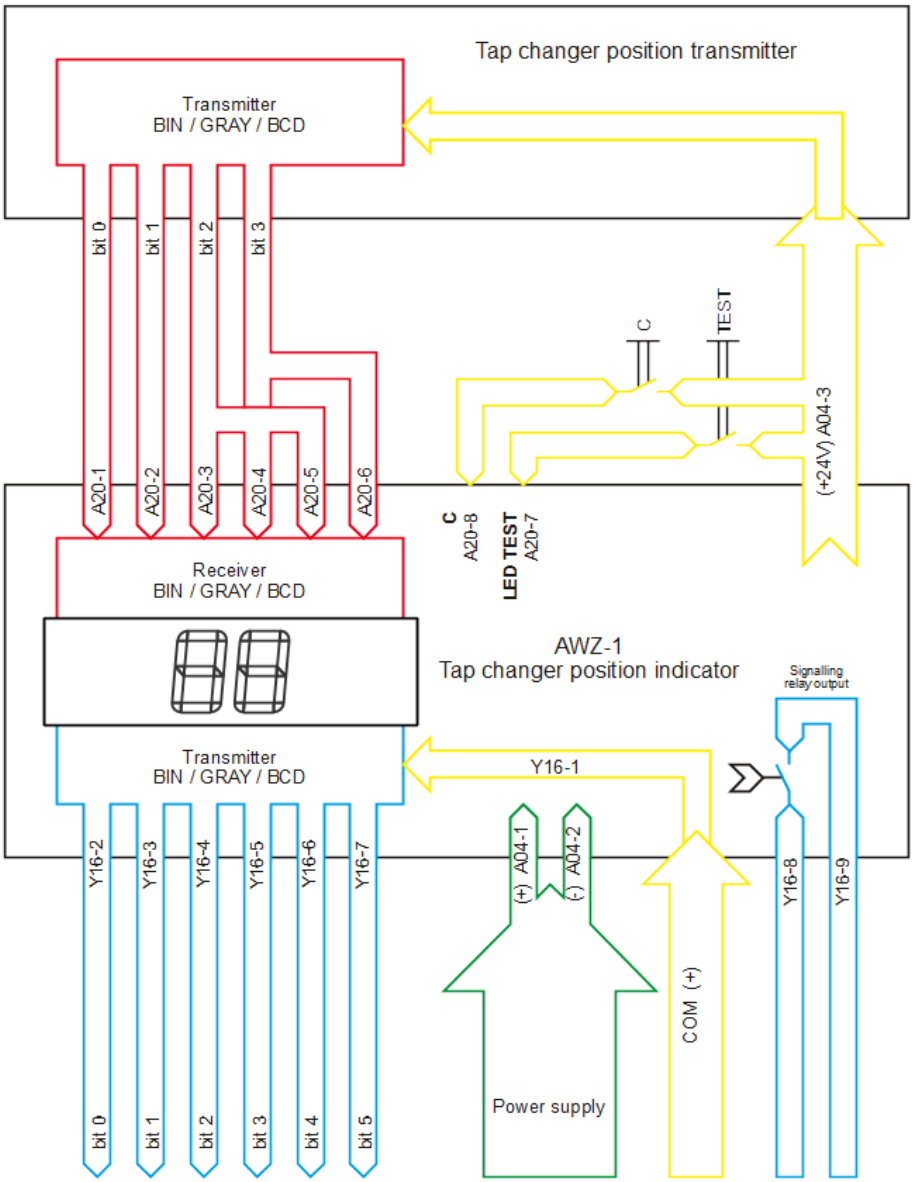

r

Fig. 7. Block diagram of cooperation AWZ-1 indicator with Energopomiar code transmitter

5. INSTALLATION AND COMMISIONING

5.1. Storage and preparation the AWZ-1 indicator for operation

Tap changer position indicator AWZ-1 is delivered to the customer in packs to ensure that device is protected against external influences that could cause damage. Therefore, do not unpack them for storage. Transport packages should be transported and reloaded with care, avoiding shocks and maintaining the position specified on their packaging. Storage is possible in indoors, dry (relative humidity <80%), free of corrosive vapors at ambient temperature -20 ºC to 70 ºC.

5.2. Operation and maintaince

As part of the periodic inspection, the tap changer position indicator AWZ-1 should be checked at least once a year.

6. SMIS 2 SOFTWARE

6.1. Start the program

AWZ-1 tap changer indicator is provided with SMiS 2 tool providing the possibility of configuration of the device, storing recorded events and visualisation of device operation and operation of particular modules. After starting the program the screen displays the main program window (Fig. 8). After clicking “Settings” button, port configuration window appears. Choose right COM port and set the baudrate 115200 bps. It is possible to select a language version for the application software. To configure the device, select the ZEG protocol. Use the Save button to set communication parameters.

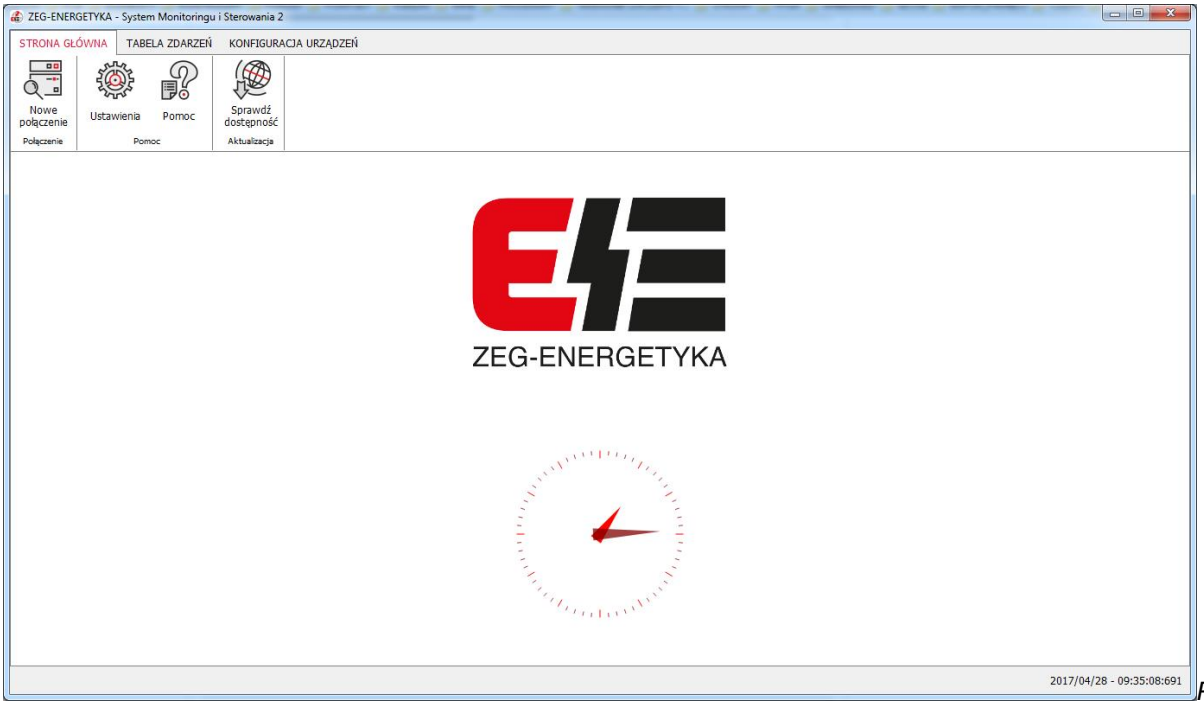

Fig. 8.

Main program window

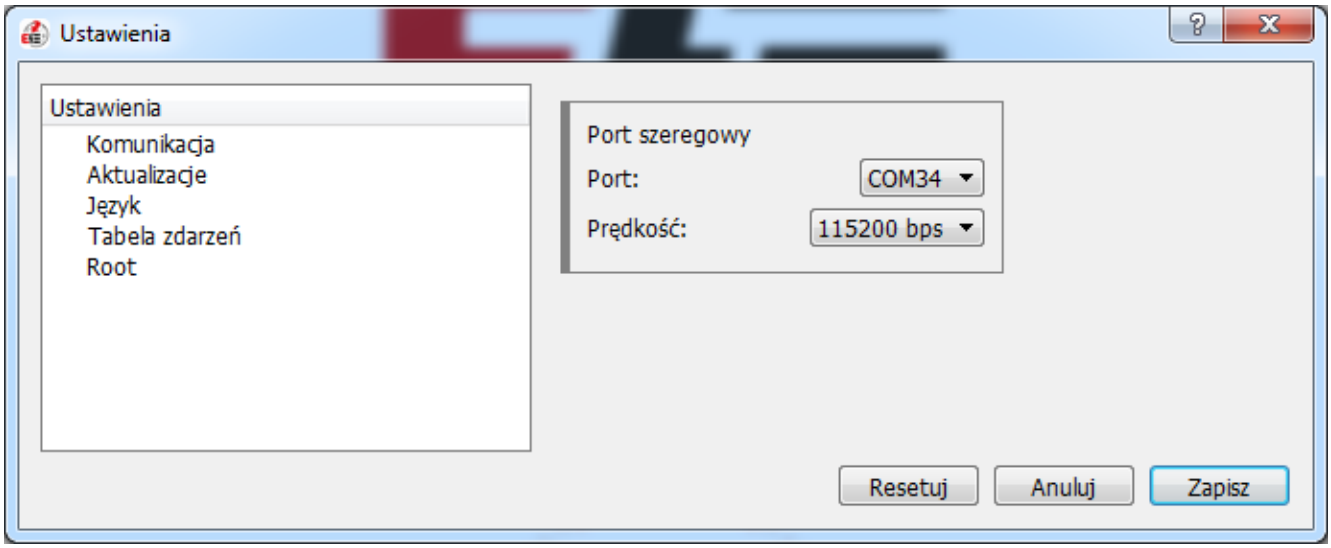

Fig. 9 . Port configuration window

6.2. Configuration of communication port

Default settings are:

- communication by: serial port
- baudrate: 115200 bps
- serial COM port
- 8 data bits
- Parity: none
- One stop bit

6.3. Connection with the device

When working with the TCP / IP options ,, select TCP / IP connection ", enter the corresponding IP address and port of the device. When communication parameters are set, click “New connection” button. It opens the device scanner window. Find the device and click “Connect”.

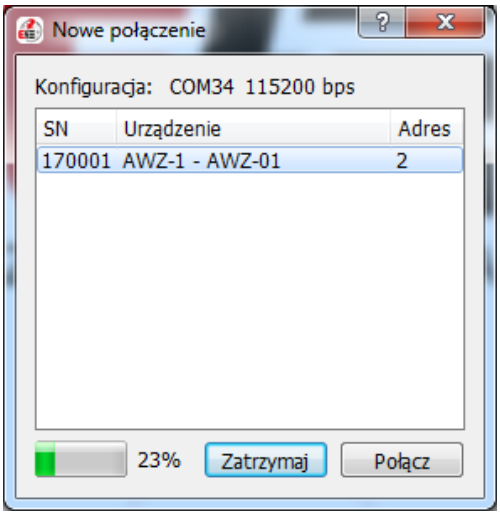

Fig. 10. Communication scanner window

After connection, the data from device are downloaded. When all data are downloaded, the application is ready for operation. On Device view window, configuration options, according to available modules, are activated.

6.4. Device view – configuration

Figure 11 presents the window enabling: device parameters configuration, inputs/outputs visualisation, chosen criteria states and LED statuses.

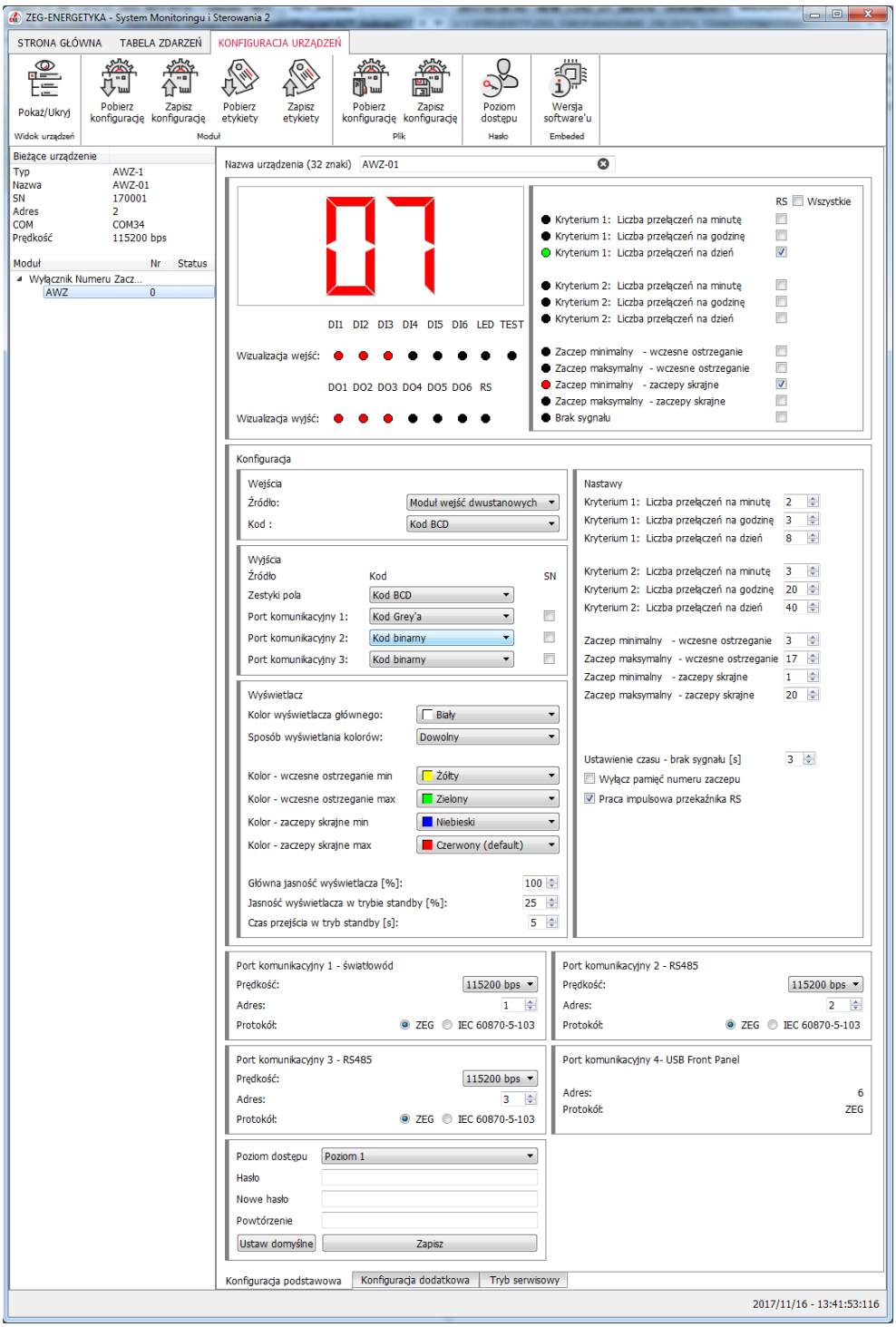

Fig. 11. Device configuration window

This window allows to configure coding standard by choosing from list of available codes. Code standard is also chosen for each communication module. Options are presented on figure 12.

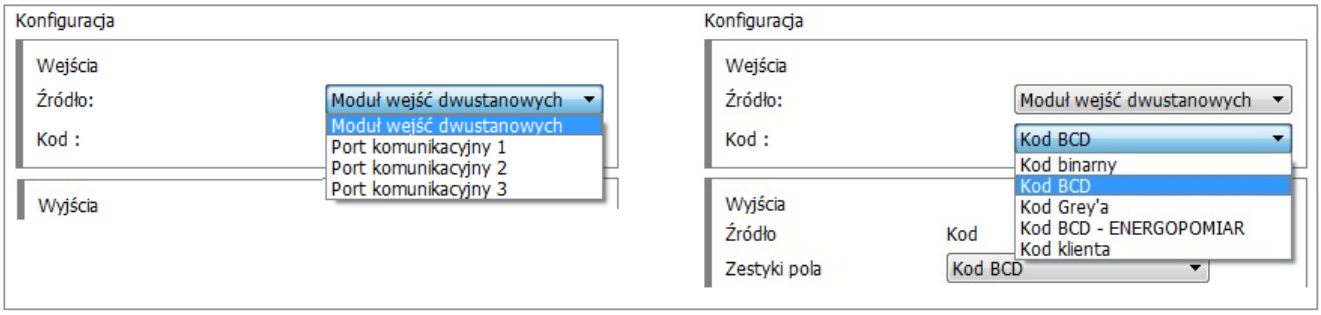

Fig. 12. Code configuration – available coding systems

In Device configuration window (display section) the colour of displayed tap position can also be configured. Two displaying manners are available: *homogenous* (default setting) or *custom*. By selecting *custom*, different manners of displaying are available: early warning of min/max tap position indication or just min/max position indication. List of available colours is shown on figure 13.

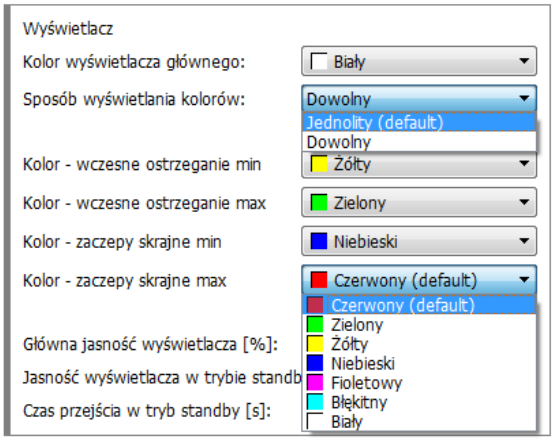

Fig. 13. Window of selection displaying manner and available colours

Display brightness, brightness in standby mode, and time to reduction brightness of display can also be set. Device configuration window allows to configure communication ports. In communication ports section following parameters can be set: baudrate (list), address and protocol.

WARNING – new setting became active after 1 minute of communication break at particular port or after reset (disconnect and reconnect of supply voltage) of device.

6.5. Inputs configuration

Figure 14 presents configuration window of optional inputs module. Configuration window presents input parameters and description which can be edited by user. It is possible to set pick-up mode by selecting from the list shown on fig. 15, time-delay (in seconds) or input code in 60870-5-103 protocol: FUN=1, INF=set by user.

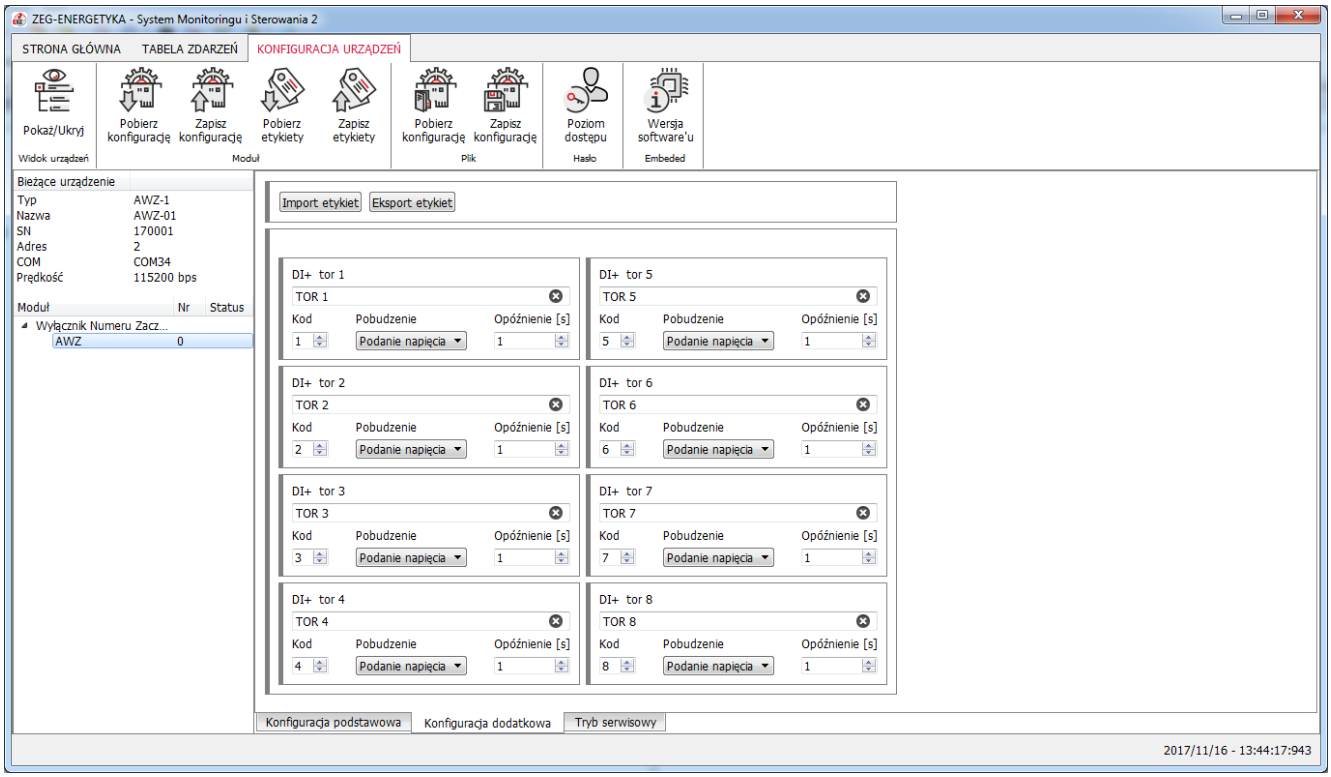

Fig. 14. Input configuration window

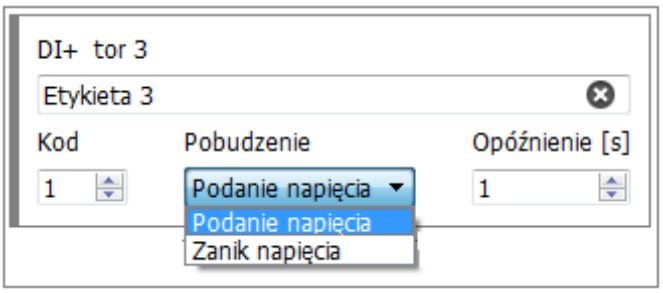

Fig. 15. Pick-up mode configuration

By clicking icon: 

new settings are sent to the device. A window requesting for a password will appear on the screen (Fig.16).

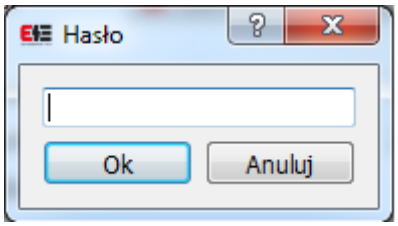

Fig. 16. Window: password request

After correctly entering the password data will be send to the device. Default passwords are: 0000 for level 1 and 1111 for level 2**.**

6.6. Events recorder

In the event recorder window (fig. 17), events occurring in the relay are displayed. A list of events on the screen can be saved to a file.

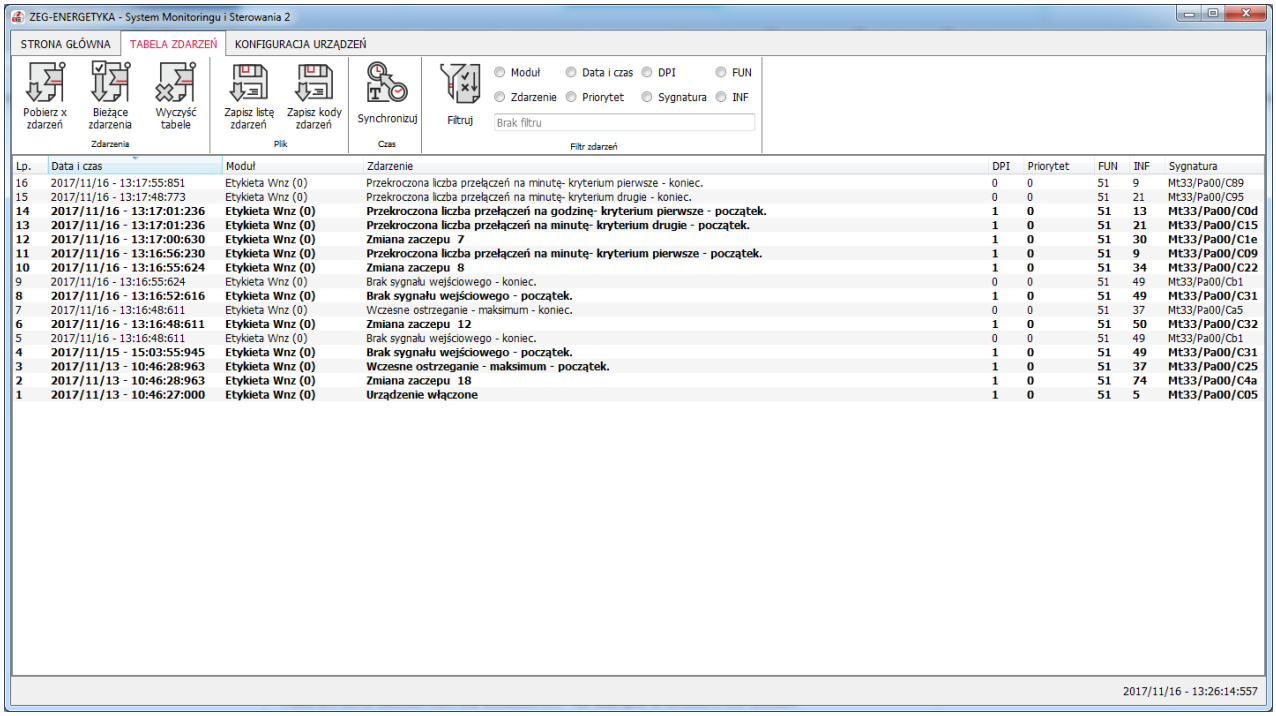

Fig. 17. Events recorder window

6.7. Permission levels

There are three levels of user rights that are password protected. The password can be changed by selecting: **Options> Passwords> Change passwords.**

Available permission levels:

- **level 0** – only preview of device status, no control, default set after program start, no passwords required
- **level 1** – preview of device operation status, permission to erase passwords and block operation
- **level 2** – configuration

Default passwords are: **0000 for level 1 and 1111 for level 2**.

6.8. Time synchronisation

By selecting the clock icon from the action bar, user has the ability to synchronize the time on the device with PC computer.

6.9. Hardware requirements

Minimum hardware configuration:

- Operating system: Windows XP 32 bits or latter
- 1,5 GHz processor
- 256 MB of RAM
- 100 MB free hard disk space
- Monitor of resolution 1280x720 (16:9)

NOTICES

NOTICES

ZEG-ENERGETYKA Sp. z o.o.
Oddział Tychy
ul. Fabryczna 2, 43-100 Tychy
tel: +48 32 775 07 80
fax: +48 32 775 07 83
biuro@zeg-energetyka.pl
www.zeg-energetyka.pl